Work Order ID 73056

Wednesday, August 24, 2011 3:46:06 PM

Item ID: D4005-041 **Accept** **Setup** **Start**

Revision ID: **Stop**

Item Name: Fwd Floor Gutter

Start Date: 8/25/2011 **Start Qty:** 4.00 **Cust Item ID:**

Required Date: 8/26/2011 **Req'd Qty:** 4.00 **Customer:**

Reference:

Approvals: **Process Plan:** MF **Date:** 11-08-24 **Tooling:** _____ **Date:** _____ **Run** **Start**

QC: _____ **Date:** _____ **SPC (Y/N):** _____ **Date:** _____ **Stop**

Sequence ID/ Work Center ID	Operation Description	Set Up/ Run Hours	Tool ID	Tool #	Plan Code	Accept Qty	Reject Qty	Reject Number	Insp. Stamp
Draw Nbr / **Revision Nbr**									
D4005 / A									
100		0.00							
Waterjet	**Memo**	0.00	11/08/25			6			
FLOW CNC Waterjet	1-Cut as per Dwg (D4005-13) Dwg Rev: A Prog Rev: A 2-Deburr if necessary								
110	QC2- Inspect parts off machine FAI/FAIB	0.00							
QC	**Memo**	0.00	11/08/25			6			
Quality Control									

Dart Aerospace Ltd

W/O:		WORK ORDER CHANGES					
DATE	STEP	PROCEDURE CHANGE	By	Date	Qty	Approval Chief Eng / Prod Mgr	Approval QC Inspector

Part No: _____ **PAR #:** _____ **Fault Category:** _____ **NCR:** Yes No **DQA:** _____ **Date:** _____

Resolution: _____ **Disposition:** _____ **QA: N/C Closed:** _____ **Date:** _____

NCR:		WORK ORDER NON-CONFORMANCE (NCR)						
DATE	STEP	Description of NC Section A	Corrective Action Section B			Verification Section C	Approval Chief Eng	Approval QC Inspector
			Initial Chief Eng	Action Description Chief Eng	Sign & Date			

NOTE: Date & initial all entries

H:\fFORMS\Quality Assurance\approved QA\NCRWO RevE

Work Order ID 73056

Wednesday, August 24, 2011 3:46:06 PM

Item ID: D4005-041 **Accept** **Setup Start** **Stop**

Revision ID:

Item Name: Fwd Floor Gutter

Start Date: 8/25/2011 **Start Qty:** 4.00 **Cust Item ID:**

Required Date: 8/26/2011 **Req'd Qty:** 4.00 **Customer:**

Reference:

Approvals: **Process Plan:** _____ **Date:** _____ **Tooling:** _____ **Date:** _____ **Run Start** **Stop**

QC: _____ **Date:** _____ **SPC (Y/N):** _____ **Date:** _____

Sequence ID/ Work Center ID	Operation Description	Set Up/ Run Hours	Tool ID	Tool #	Plan Code	Accept Qty	Reject Qty	Reject Number	Insp. Stamp
120 QC Quality Control	QC8- Inspect parts - second check **Memo**	0.00 0.00	8 11/08/25			66			
130 Brake NC Brake NC	Bend as per dwg **Memo** Bend D4005-13 as per Dwg	0.00 0.00	SB 11/08/25			6			
140 QC Quality Control	QC5- Inspect part completeness to step on W/O **Memo**	0.00 0.00	8 11/08/25			66			

Dart Aerospace Ltd

W/O:		WORK ORDER CHANGES					
DATE	STEP	PROCEDURE CHANGE	By	Date	Qty	Approval Chief Eng / Prod Mgr	Approval QC Inspector

Part No: _____ **PAR #:** _____ **Fault Category:** _____ **NCR:** Yes No **DQA:** _____ **Date:** _____

Resolution: _____ **Disposition:** _____ **QA: N/C Closed:** _____ **Date:** _____

NCR:		WORK ORDER NON-CONFORMANCE (NCR)						
DATE	STEP	Description of NC Section A	Corrective Action Section B			Verification Section C	Approval Chief Eng	Approval QC Inspector
			Initial Chief Eng	Action Description Chief Eng	Sign & Date			

NOTE: Date & initial all entries

H:\fFORMS\Quality Assurance\approved QA\NCRWO RevE

Work Order ID 73056

Wednesday, August 24, 2011 3:46:06 PM

Item ID: D4005-041 **Accept** **Setup Start**

Revision ID:

Item Name: Fwd Floor Gutter **Stop**

Start Date: 8/25/2011 **Start Qty:** 4.00 **Cust Item ID:**

Required Date: 8/26/2011 **Req'd Qty:** 4.00 **Customer:**

Reference:

Approvals: **Process Plan:** _____ **Date:** _____ **Tooling:** _____ **Date:** _____ **Run Start**

QC: _____ **Date:** _____ **SPC (Y/N):** _____ **Date:** _____ **Stop**

Sequence ID/ Work Center ID	Operation Description	Set Up/ Run Hours	Tool ID	Tool #	Plan Code	Accept Qty	Reject Qty	Reject Number	Insp. Stamp
141	Weld per dwg A/R Aluminum rod Batch: 114514	0.00							
Large Fab			11.08.31			4	ø		
	Memo	0.00							
Large Fab	Weld D4003-13 tube to angle as per dwg D4005 2- grind flush as per dwg								
142	QC9- Inspect visual per QSI004- Fusion Welds	0.00							
QC						4	ø	11/08/31	
	Memo	0.00							
Quality Control									
143	QC5- Inspect part completeness to step on W/O	0.00							
QC			11/08/31			+4	+2		
	Memo	0.00							
Quality Control									

Dart Aerospace Ltd

W/O: 73056	WORK ORDER CHANGES						
DATE	STEP	PROCEDURE CHANGE	By	Date	Qty	Approval Chief Eng / Prod Mgr	Approval QC Inspector

Part No: D4005-041 PAR #: N/A Fault Category: Lack FAB / ~~Design~~ NCR: (Yes) No DQA: [illegible] Date: 11.09.08

11/8/11 Resolution: Scrap Disposition: Scrap QA: N/C Closed: [illegible] Date: 11/09/08

NCR:	WORK ORDER NON-CONFORMANCE (NCR)							
DATE	STEP	Description of NC Section A	Corrective Action Section B: Initial Chief Eng	Action Description Chief Eng	Sign & Date	Verification Section C	Approval Chief Eng	Approval QC Inspector
11/08/31	# 141	Qty +2 scrap. Cracked during welding R.C. Process.	11.08.31 QS10A2	Scrap + Destroy No Replace.	11.09.06	11/08/31	11.08.31	11/08/31

NOTE: Date & initial all entries

H:\fFORMS\Quality Assurance\approved QA\NCRWO RevE

Work Order ID 73056

Wednesday, August 24, 2011 3:46:06 PM

Item ID: D4005-041 **Accept** **Setup Start**

Revision ID: **Stop**

Item Name: Fwd Floor Gutter

Start Date: 8/25/2011 **Start Qty:** 4.00 **Cust Item ID:**

Required Date: 8/26/2011 **Req'd Qty:** 4.00 **Customer:**

Reference:

Approvals: **Process Plan:** _____ **Date:** _____ **Tooling:** _____ **Date:** _____ **Run Start**

QC: _____ **Date:** _____ **SPC (Y/N):** _____ **Date:** _____ **Stop**

Sequence ID/ Work Center ID	Operation Description	Set Up/ Run Hours	Tool ID	Tool #	Plan Code	Accept Qty	Reject Qty	Reject Number	Insp. Stamp
150	Chemical Conversion Coat per QSI005 4.1	0.00							
HandFinish	**Memo**	0.00							
Hand Finishing									
160	Grey Sandtex(Ref:4.3.5.6) per QSI005 4.3	0.00							
Powdercoat	**Memo**	0.00							
Powder Coating	Start Time: 8:40 Oven Temperature: 320°F Finish Time: 9:10								
170	QC3- Inspect Part Finish	0.00							
QC	**Memo**	0.00							
Quality Control									

11·09·1

M 117338

4X Ø M-P 11/09/02

11/9/2

Dart Aerospace Ltd

W/O:		WORK ORDER CHANGES					
DATE	STEP	PROCEDURE CHANGE	By	Date	Qty	Approval Chief Eng / Prod Mgr	Approval QC Inspector

Part No: _____ **PAR #:** _____ **Fault Category:** _____ **NCR:** Yes No **DQA:** _____ **Date:** _____

Resolution: _____ **Disposition:** _____ **QA: N/C Closed:** _____ **Date:** _____

NCR:		WORK ORDER NON-CONFORMANCE (NCR)						
DATE	STEP	Description of NC Section A	Corrective Action Section B			Verification Section C	Approval Chief Eng	Approval QC Inspector
			Initial Chief Eng	Action Description Chief Eng	Sign & Date			

NOTE: Date & initial all entries

H:\fFORMS\Quality Assurance\approved QA\NCRWO RevE

Work Order ID 73056

Wednesday, August 24, 2011 3:46:06 PM

Item ID: D4005-041 **Accept** **Setup Start**

Revision ID: **Stop**

Item Name: Fwd Floor Gutter

Start Date: 8/25/2011 **Start Qty:** 4.00 **Cust Item ID:**

Required Date: 8/26/2011 **Req'd Qty:** 4.00 **Customer:**

Reference:

Approvals: **Process Plan:** _____ **Date:** _____ **Tooling:** _____ **Date:** _____ **Run Start**

QC: _____ **Date:** _____ **SPC (Y/N):** _____ **Date:** _____ **Stop**

Sequence ID/ Work Center ID	Operation Description	Set Up/ Run Hours	Tool ID	Tool #	Plan Code	Accept Qty	Reject Qty	Reject Number	Insp. Stamp
190	Identify as per dwg & Stock Location 142	0.00				11 9 6			42
Packaging	**Memo**	0.00							
Packaging									
200	QC21- Final Inspection - Work Order Release	0.00					11/9/6		
QC	**Memo**	0.00							
Quality Control									

MF
11-09-06

Dart Aerospace Ltd

W/O:		WORK ORDER CHANGES					
DATE	STEP	PROCEDURE CHANGE	By	Date	Qty	Approval Chief Eng / Prod Mgr	Approval QC Inspector

Part No: _____ **PAR #:** _____ **Fault Category:** _____ **NCR:** Yes No **DQA:** _____ **Date:** _____

Resolution: _____ **Disposition:** _____ **QA: N/C Closed:** _____ **Date:** _____

NCR:		WORK ORDER NON-CONFORMANCE (NCR)						
DATE	STEP	Description of NC Section A	Corrective Action Section B			Verification Section C	Approval Chief Eng	Approval QC Inspector
			Initial Chief Eng	Action Description Chief Eng	Sign & Date			

NOTE: Date & initial all entries

H:\fFORMS\Quality Assurance\approved QA\NCRWO RevE

Picklist Print

Wednesday, August 24, 2011 3:46:01 PM

Work Order ID: 73056

Parent Item: D4005-041

Parent Item Name: Fwd Floor Gutter

Start Date: 8/25/2011 **Required Date:** 8/26/2011

Start Qty: 4.00 **Required Qty:** 4.00

Comments: IPP rev A 10.01.21 new issue Prelim EC verified by:DD IPP Rev:B
10.05.03 as per ECN10-562 DD verified by:EC

Component Item ID/ Item Name	Replacement Item ID	Mfg/ Purch	Bin Item	Primary Location	Last Location	Route Seq ID	Unit of Measure	Qty on Hand	Qty per Kit	Total Qty	Qty Issued	Date Issued	Status
D4003-13 Fwd Fuel Gutter Line		Manufactured	No			141	Each	7.0000	1	4	11.08.31		
				Location			**Loc Qty**		**Loc Code**				
				ST104			7						
					64317		7			4			
M2024T3S.040 2024-T3 .040 sheet		Purchased	No			100	sf	181.9184	0.42	1.768421			
				Location			**Loc Qty**		**Loc Code**				
				MAT022			181.918421						
					112291		0.5						
					112331		0.2						
					113162		18.1						
					117684		163.118421			2.6	11/08/25		

Dart Aerospace Ltd

W/O:		WORK ORDER CHANGES					
DATE	STEP	PROCEDURE CHANGE	By	Date	Qty	Approval Chief Eng / Prod Mgr	Approval QC Inspector

Part No: _____ **PAR #:** _____ **Fault Category:** _____ **NCR:** Yes No **DQA:** _____ **Date:** _____

Resolution: _____ **Disposition:** _____ **QA: N/C Closed:** _____ **Date:** _____

NCR:		WORK ORDER NON-CONFORMANCE (NCR)						
DATE	STEP	Description of NC Section A	Corrective Action Section B			Verification Section C	Approval Chief Eng	Approval QC Inspector
			Initial Chief Eng	Action Description Chief Eng	Sign & Date			

NOTE: Date & initial all entries

H:\fFORMS\Quality Assurance\approved QA\NCRWO RevE

DART AEROSPACE LTD	Work Order:	73056
Description: Angle	Part Number:	D4005-13
Inspection Dwg: D4005 Rev: A		Page 1 of 1

FIRST ARTICLE INSPECTION CHECKLIST

Drawing Dimension	Tolerance	Actual Dimension	Accept	Reject	Method of Inspection	Comments
Ø0.375	+0.006/-0.001	Ø.378	—		RA26	Vern
1.67	+/-0.030	1.675	—		"	
26.77	+/-0.030	26.77	—		RA04	TAPE
4.00	+/-0.030	4.00	—		"	
1.25	+/-0.030	1.25	—		"	
2.22	+/-0.030	2.22	—		"	
2.26	+/-0.030	2.26	—		"	
1.87	+/-0.030	1.875	—		"	
3.70	+/-0.030	3.70	—		"	
4.12	+/-0.030	4.12	—		"	
9.08	+/-0.030	9.08	—		"	
9.13	+/-0.030	9.13	—		"	
0.040	+/-0.010	0.042	—		RA26	Vern

Measured by:	[signature]	Audited by:	[signature]	Preliminary Approval:	N/A
Date:	11/08/25	Date:	11/08/25	Date:	N/A

Rev	Date	Change		Revised by	Approved
A	10.08.03	New Issue	P/O D4005-041	KJ [signature]	[signature]

Dart Aerospace Ltd

W/O:		WORK ORDER CHANGES					
DATE	STEP	PROCEDURE CHANGE	By	Date	Qty	Approval Chief Eng / Prod Mgr	Approval QC Inspector

Part No: _____ **PAR #:** _____ **Fault Category:** _____ **NCR:** Yes No **DQA:** _____ **Date:** _____

Resolution: _____ **Disposition:** _____ **QA: N/C Closed:** _____ **Date:** _____

NCR:		WORK ORDER NON-CONFORMANCE (NCR)						
DATE	STEP	Description of NC Section A	Corrective Action Section B			Verification Section C	Approval Chief Eng	Approval QC Inspector
			Initial Chief Eng	Action Description Chief Eng	Sign & Date			

NOTE: Date & initial all entries

ITEM NO.	QTY. -041	PART NUMBER	DESCRIPTION	JOHN CAMERON AVIATION PART NUMBER
1	X	D4005-041	FORWARD FLOOR GUTTER	JCA-M47-2-22
2	1	D4005-13	ANGLE	
3	1	D4003-13	TUBE	

#730530

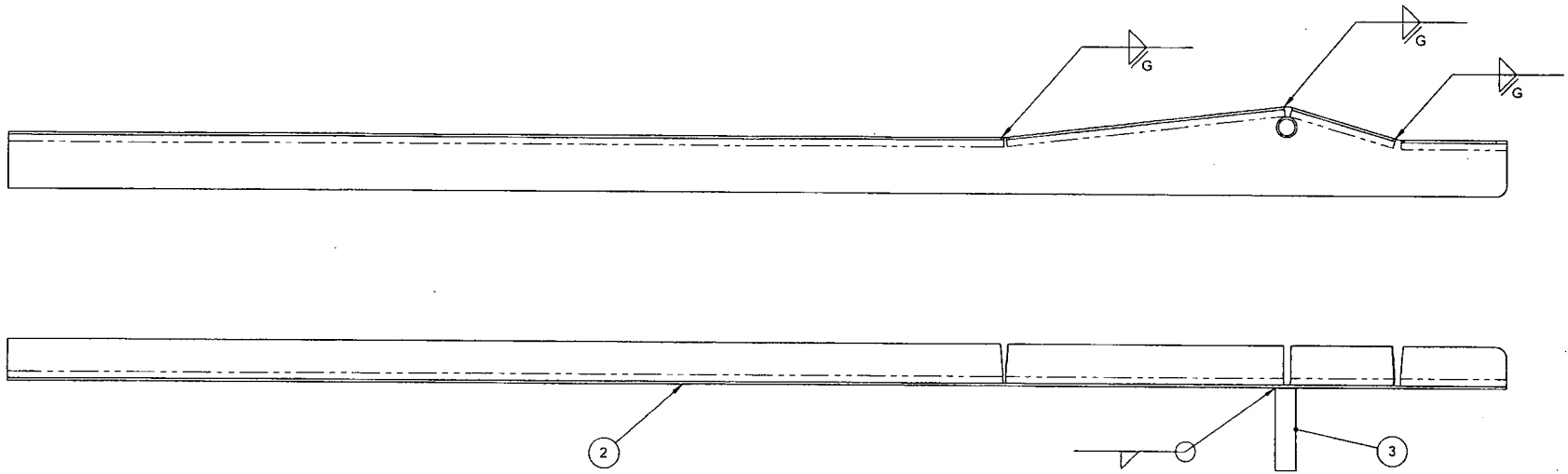

D4005-041 FORWARD FLOOR GUTTER

RELEASED
2010 -05- 05

NOTES:
1) MATERIAL: N/A
2) FINISH: CHEMICAL CONVERSION COAT PER DAT QSI 005 4.2
POWDER COAT "GREY SANDTEX" (4.3.5.6) PER DART QSI 005 4.3
3) TOLERANCES: PER DART QSI 018 UNLESS OTHERWISE NOTED
4) UNITS: INCHES UNLESS OTHERWISE NOTED
5) BREAK SHARP EDGES: 0.005 TO 0.010 MAX
6) IDENTIFICATION: IDENTIFY WITH DART P/N "D4005-041" AND B/N USING FINE POINT PERMANENT INK MARKER
7) WEIGHT: 0.22 lbs
8) WELD PER DART QSI 004

REV.	DESCRIPTION	BY	DATE
A	NEW ISSUE		10.02.05

DESIGN	
DRAWN	
CHECKED	
MFG. APPR.	
APPROVED	
DE APPR.	
DATE	10.02.05

DART AEROSPACE LTD
HAWKESBURY, ONTARIO, CANADA

DRAWING NO. D4005 REV. A
SHEET 1 OF 15
TITLE RESTRAINT
SCALE NTS

COPYRIGHT © 2010 BY DART AEROSPACE LTD
THIS DOCUMENT IS PRIVATE AND CONFIDENTIAL AND IS SUPPLIED ON THE EXPRESS CONDITION THAT IT IS NOT TO BE USED FOR ANY PURPOSE OR COPIED OR COMMUNICATED TO ANY OTHER PERSON WITHOUT WRITTEN PERMISSION FROM DART AEROSPACE LTD.

Dart Aerospace Ltd

W/O:		WORK ORDER CHANGES					
DATE	STEP	PROCEDURE CHANGE	By	Date	Qty	Approval Chief Eng / Prod Mgr	Approval QC Inspector

Part No: _____ **PAR #:** _____ **Fault Category:** _____ **NCR:** Yes No **DQA:** _____ **Date:** _____

Resolution: _____ **Disposition:** _____ **QA: N/C Closed:** _____ **Date:** _____

NCR:		WORK ORDER NON-CONFORMANCE (NCR)						
DATE	STEP	Description of NC Section A	Corrective Action Section B			Verification Section C	Approval Chief Eng	Approval QC Inspector
			Initial Chief Eng	Action Description Chief Eng	Sign & Date			

NOTE: Date & initial all entries

H:\fFORMS\Quality Assurance\approved QA\NCRWO RevE

DART AEROSPACE PART NUMBER	JOHN CAMERON AVIATION PART NUMBER
D4005-13	REF JCA-M47-2-22

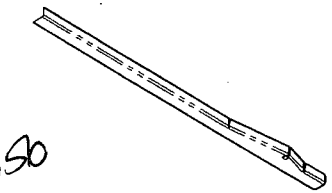

#73050

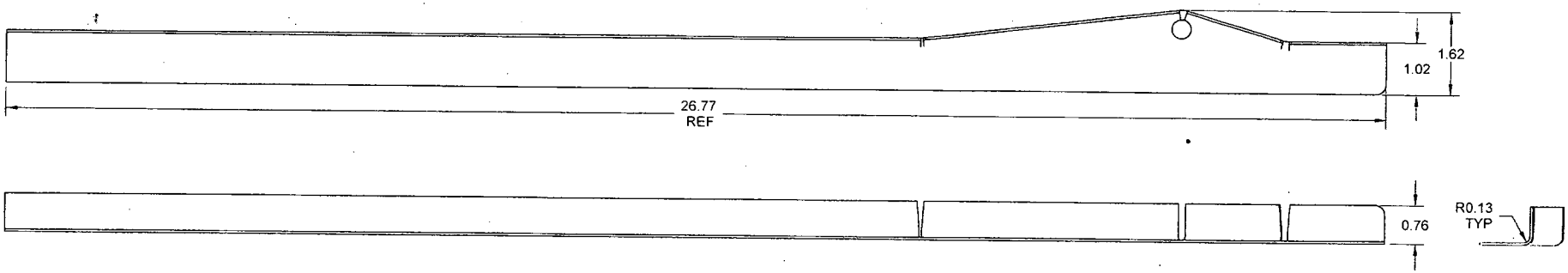

D4005-13 ANGLE

RELEASED
2010 -05- 05

NOTES:
1) MATERIAL: MADE FROM D4005-13F
2) FINISH: CHEMICAL CONVERSION COAT PER DART QSI 005 4.1
3) TOLERANCES: PER DART QSI 018 UNLESS OTHERWISE NOTED
4) UNITS: INCHES UNLESS OTHERWISE NOTED
5) BREAK SHARP EDGES: 0.005 TO 0.010 MAX
6) IDENTIFICATION: N/A
7) WEIGHT: 0.21 lbs

DESIGN	
DRAWN	
CHECKED	
MFG. APPR.	
APPROVED	
DE APPR.	
DATE	10.02.05

DART AEROSPACE LTD
HAWKESBURY, ONTARIO, CANADA

DRAWING NO. D4005 REV. A
SHEET 14 OF 15
TITLE RESTRAINT
SCALE NTS

COPYRIGHT © 2010 BY DART AEROSPACE LTD
THIS DOCUMENT IS PRIVATE AND CONFIDENTIAL AND IS SUPPLIED ON THE EXPRESS CONDITION THAT IT IS NOT TO BE USED FOR ANY PURPOSE OR COPIED OR COMMUNICATED TO ANY OTHER PERSON WITHOUT WRITTEN PERMISSION FROM DART AEROSPACE LTD.

Dart Aerospace Ltd

W/O:		WORK ORDER CHANGES					
DATE	STEP	PROCEDURE CHANGE	By	Date	Qty	Approval Chief Eng / Prod Mgr	Approval QC Inspector

Part No: _____ **PAR #:** _____ **Fault Category:** _____ **NCR:** Yes No **DQA:** _____ **Date:** _____

Resolution: _____ **Disposition:** _____ **QA: N/C Closed:** _____ **Date:** _____

NCR:		WORK ORDER NON-CONFORMANCE (NCR)						
DATE	STEP	Description of NC Section A	Corrective Action Section B			Verification Section C	Approval Chief Eng	Approval QC Inspector
			Initial Chief Eng	Action Description Chief Eng	Sign & Date			

NOTE: Date & initial all entries

H:\fFORMS\Quality Assurance\approved QA\NCRWO RevE

#7B056

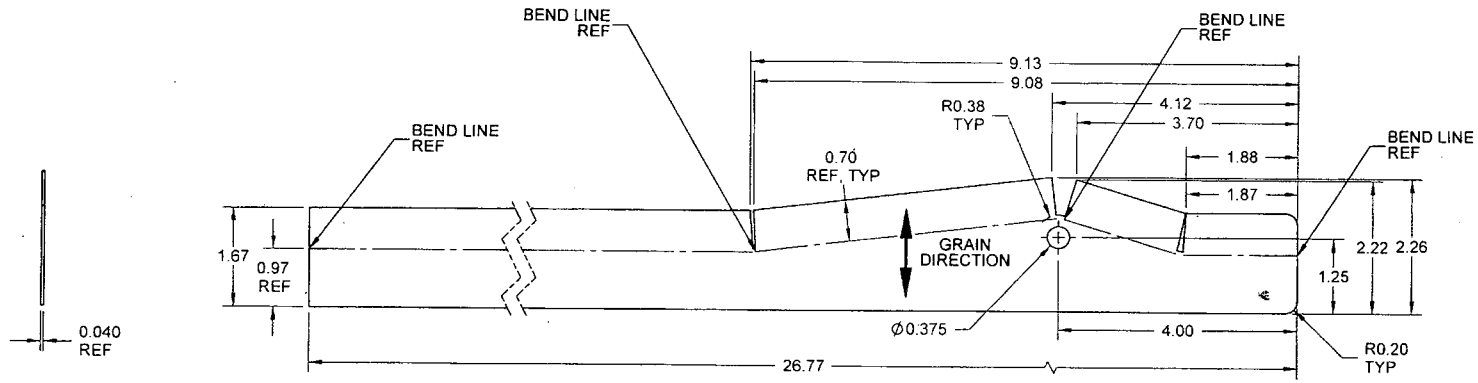

D4005-13F FLAT PATTERN

RELEASED
2010-05-05

NOTES:
1) MATERIAL: 6061-T6/T62 ALUMINUM SHEET, 0.040 THICK
PER QQ-A-250/11 OR AMS-QQ-A-250/11
OR AMS 4025 OR AMS 4027 OR ASTM B209
REF DART SPEC M6061T6S.040
2) FINISH: N/A
3) TOLERANCES: PER DART QSI 018 UNLESS OTHERWISE NOTED
4) UNITS: INCHES UNLESS OTHERWISE NOTED
5) BREAK SHARP EDGES: 0.005 TO 0.010 MAX
6) IDENTIFICATION: N/A
7) WEIGHT: 0.21 lbs

DESIGN		DART AEROSPACE LTD HAWKESBURY, ONTARIO, CANADA
DRAWN		
CHECKED		DRAWING NO. D4005 — REV. A — SHEET 15 OF 15
MFG. APPR.		
APPROVED		TITLE: RESTRAINT — SCALE: NTS
DE APPR.		
DATE 10.02.05		

COPYRIGHT © 2010 BY DART AEROSPACE LTD
THIS DOCUMENT IS PRIVATE AND CONFIDENTIAL AND IS SUPPLIED ON THE EXPRESS CONDITION THAT IT IS NOT TO BE USED FOR ANY PURPOSE OR COPIED OR COMMUNICATED TO ANY OTHER PERSON WITHOUT WRITTEN PERMISSION FROM DART AEROSPACE LTD

Dart Aerospace Ltd

W/O:		WORK ORDER CHANGES					
DATE	STEP	PROCEDURE CHANGE	By	Date	Qty	Approval Chief Eng / Prod Mgr	Approval QC Inspector

Part No: _____ **PAR #:** _____ **Fault Category:** _____ **NCR:** Yes No **DQA:** _____ **Date:** _____

Resolution: _____ **Disposition:** _____ **QA: N/C Closed:** _____ **Date:** _____

NCR:		WORK ORDER NON-CONFORMANCE (NCR)						
DATE	STEP	Description of NC Section A	Corrective Action Section B			Verification Section C	Approval Chief Eng	Approval QC Inspector
			Initial Chief Eng	Action Description Chief Eng	Sign & Date			

NOTE: Date & initial all entries

H:\FORMS\Quality Assurance\approved QA\NCRWO RevE